WIRING
Variax Standard
(based on Yamaha Pacifica)

2018-04-10

Sigi Flamisch

All component values as measured at my device

red: my modifications

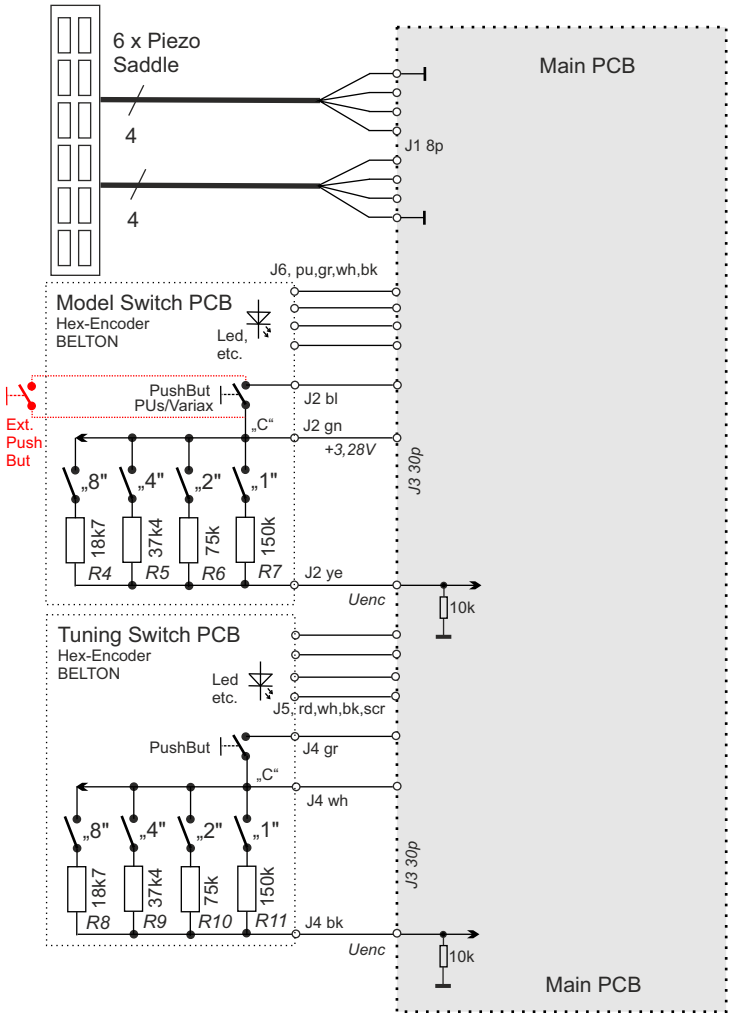

Hex-switch BELTON (only 12 positions used)							
Sw-Pos.	"8"	"4"	"2"	"1"	Model-Sw.	Tuning-Sw.	Uenc/Volt
0					Custom 1	Model	0,00
1				C	T-Model	Standard	0,21
2			C		Spank	Drop D	0,39
3			C	C	Lester	1/2 Down	
4		C			Special	Drop Db	0,69
5		C		C	R-Billy	1 Down	
6		C	C		Chime	DADGAD	
7		C	C	C	Semi	Open D	
8	C				Jazzbox	Blues G	1,14
9	C			C	Acoustic	Reso G	
10	C		C		Reso	Open A	
11	C		C	C	Custom 2	Baritone	
…	(not used)				…	…	
	C = Connection to pin "C"						at Vin=3,28V
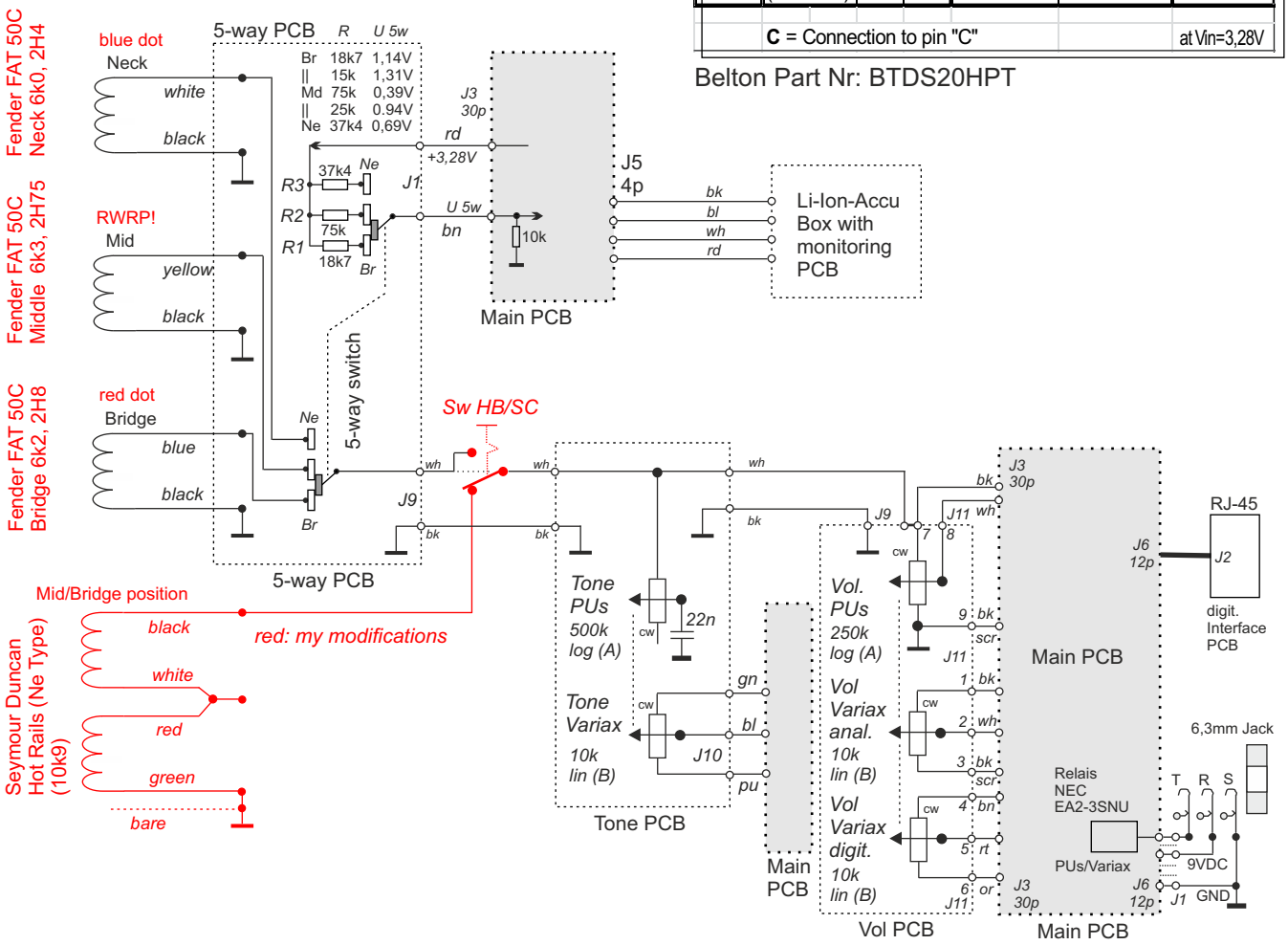
Belton Part Nr: BTDS20HPT