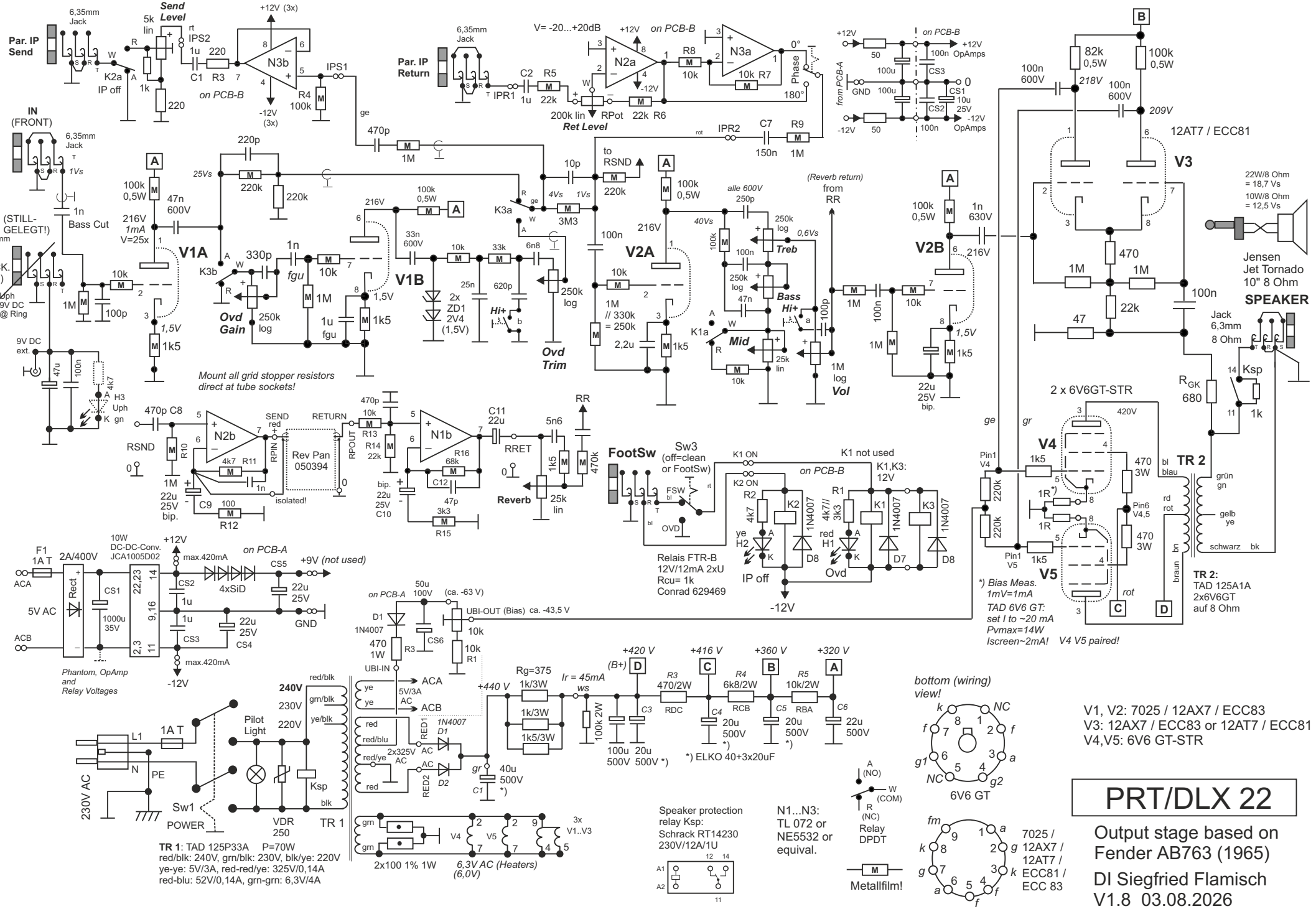

Par. IP Send
6,35mm Jack
Send Level
5k lin
IPS2
1u
220
C1
R3
N3b
+12V (3x)
-12V (3x)
on PCB-B
K2a
IP off
1k
220
R4 100k
IPS1
IN (FRONT)
1Vs
1n Bass Cut
(STILL-GELEGT!)
IN (BACK. SIDE)
Uph 9V DC @ Ring
9V DC ext.
47u
100n
4k7
H3 Uph gn
V1A
100k 0,5W
47n 600V
216V 1mA V=25x
220p
220k
25Vs
1,5V
1k5
K3b
330p
1n
fgu
10k
1M
1u fgu
Ovd Gain
250k log
V1B
216V
100k 0,5W
33n 600V
10k
33k
6n8
25n
620p
2x ZD1 2V4 (1,5V)
Hi+
Ovd Trim
250k log
Mount all grid stopper resistors direct at tube sockets!
470p
1M
Par. IP Return
IPR1
C2 1u
R5 22k
V= -20...+20dB
N2a
+12V
-12V
on PCB-B
R8 10k
N3a
10k R7
Phase
0°
180°
200k lin RPot
Ret Level
22k R6
IPR2
C7 150n
R9 1M
to RSND
10p
220k
K3a
4Vs
1Vs
3M3
100n
V2A
216V
100k 0,5W
10k
1M // 330k = 250k
2,2u
1k5
alle 600V
250p
40Vs
100k
100n
250k log
Treb
0,6Vs
250k log
47n
Bass
Hi+
K1a
Mid
25k lin
10k
(Reverb return) from RR
100p
1M log Vol
V2B
100k 0,5W
1n 630V
216V
1M
100n
10k
1M
1,5V
1k5
22u 25V bip.
from PCB-A
GND
+12V
-12V
50
100u
100n
CS3
CS1 10u 25V
CS2
100n
+12V OpAmps
-12V OpAmps
100n 600V
82k 0,5W
218V
100k 0,5W
100n 600V
209V
12AT7 / ECC81
V3
470
1M
1M
22k
47
100n
22W/8 Ohm = 18,7 Vs
10W/8 Ohm = 12,5 Vs
Jensen Jet Tornado 10" 8 Ohm
SPEAKER
Jack 6,3mm 8 Ohm
Ksp
1k
RGK 680
2 x 6V6GT-STR
420V
V4
470 3W
TR 2
1k5
1R*)
1R
470 3W
V5
1k5
Pin1 V4
Pin1 V5
Pin6 V4,5
220k
220k
bl blau
rd rot
grün gn
gelb ye
schwarz bk
braun bn
rot
TR 2: TAD 125A1A 2x6V6GT auf 8 Ohm
*) Bias Meas. 1mV=1mA
TAD 6V6 GT: set I to ~20 mA Pvmax=14W Iscreen~2mA!
V4 V5 paired!
470p C8
RSND
N2b
SEND red
RETURN
RPIN
RPOUT
Rev Pan 050394
isolated!
1M
22u 25V bip.
C9 100
R12
470p
10k
R13
R14 22k
N1b
R16 68k
C12
47p
3k3
R15
bip. 22u 25V C10
C11 22u
RRET
5n6
RR
1k5
470k
Reverb
25k lin
FootSw
Sw3 (off=clean or FootSw)
FSW
OVD
K1 ON
K2 ON
K1 not used
on PCB-B
K1,K3: 12V
R2 4k7
K2
1N4007
R1 4k7// 3k3
K1
1N4007
K3
1N4007
ye H2
red H1
IP off
Ovd
D8
D7
D8
-12V
Relais FTR-B 12V/12mA 2xU Rcu= 1k Conrad 629469
F1 1A T
2A/400V
10W DC-DC-Conv. JCA1005D02
+12V
max.420mA
on PCB-A
CS5
+9V (not used)
ACA
5V AC
ACB
Rect
CS1
1000u 35V
22,23
9,16
2,3
14
11
CS2
1u
1u
CS3
CS4
22u 25V
22u 25V
4xSiD
GND
max.420mA
-12V
Phantom, OpAmp and Relay Voltages
on PCB-A
50u 100V
(ca. -63 V)
UBI-OUT (Bias) ca. -43,5 V
D1 1N4007
470 1W
R3
CS6
10k
10k R1
UBI-IN
ACA
5V/3A AC
ACB
240V
230V
220V
red/blk
grn/blk
ye/blk
blk
Pilot Light
VDR 250
Ksp
TR 1
230V AC
L1
1A T
N
PE
Sw1
POWER
red
red/blu
red/ye
red
2x325V AC
RED1
RED2
1N4007 D1
D2
gr
C1
40u 500V *)
+440 V
Rg=375
1k/3W
1k/3W
1k5/3W
Ir = 45mA
ws
100k 2W
100u 500V
20u 500V *)
+420 V
(B+)
R3 470/2W
RDC
C3
+416 V
R4 6k8/2W
RCB
C4
20u 500V *)
+360 V
R5 10k/2W
RBA
C5
20u 500V *)
+320 V
C6
22u 500V
*) ELKO 40+3x20uF
TR 1: TAD 125P33A P=70W
red/blk: 240V, grn/blk: 230V, blk/ye: 220V
ye-ye: 5V/3A, red-red/ye: 325V/0,14A
red-blu: 52V/0,14A, grn-grn: 6,3V/4A
2x100 1% 1W
6,3V AC (Heaters) (6,0V)
3x V1..V3
Speaker protection relay Ksp: Schrack RT14230 230V/12A/1U
N1...N3: TL 072 or NE5532 or equival.
A (NO)
W (COM)
R (NC)
Relay DPDT
Metallfilm!
bottom (wiring) view!
6V6 GT
7025 / 12AX7 / 12AT7 / ECC81 / ECC 83
V1, V2: 7025 / 12AX7 / ECC83
V3: 12AX7 / ECC83 or 12AT7 / ECC81
V4,V5: 6V6 GT-STR
PRT/DLX 22
Output stage based on Fender AB763 (1965)
DI Siegfried Flamisch
V1.8 03.08.2026